# EXHIBIT B
## COOPERATIVE EASEMENT AGREEMENT, SEPTEMBER 2007

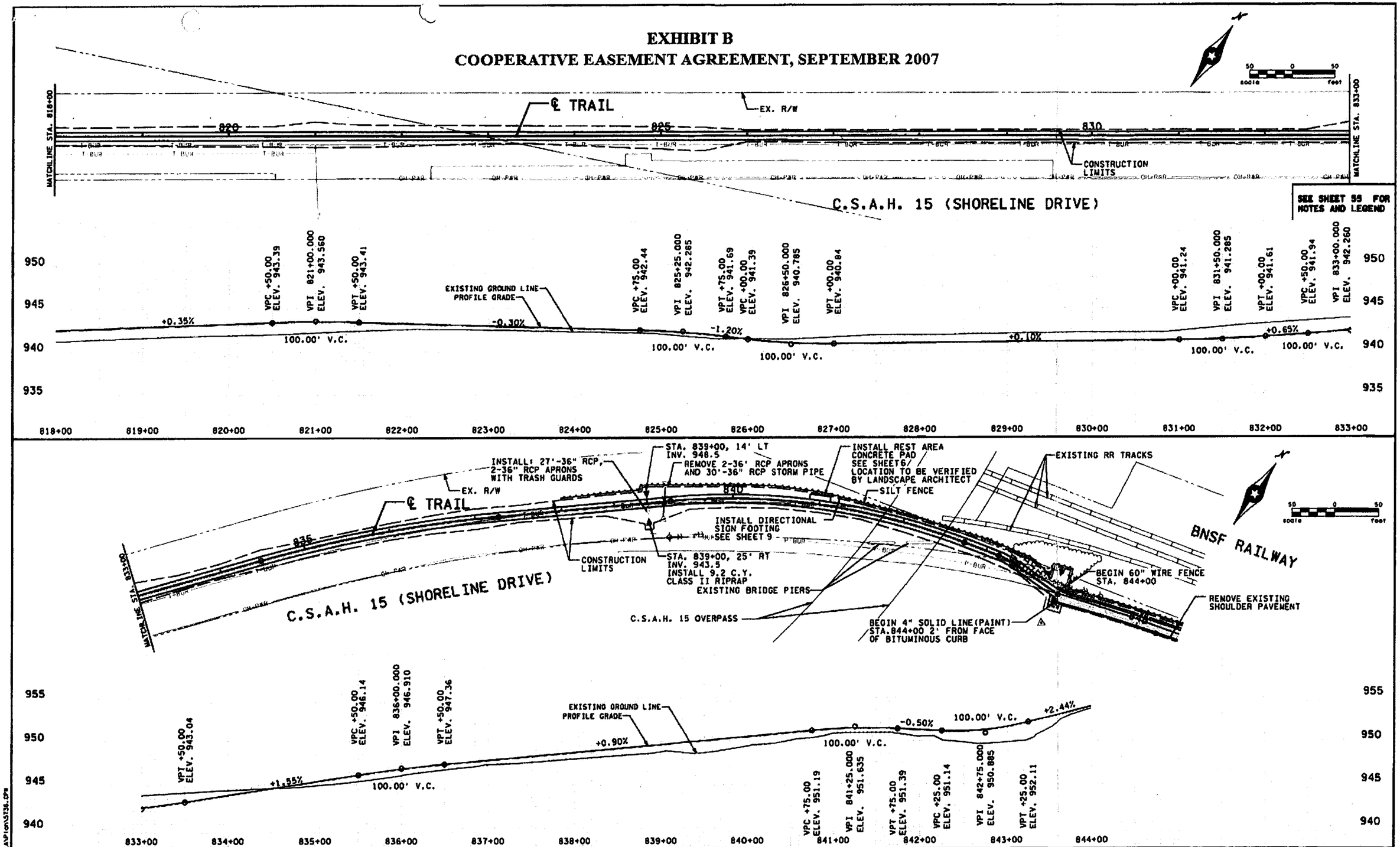


| NO | DATE | BY | CKD | APPR | REVISION |
|---|---|---|---|---|---|
| | | | | | |

...\Projects\5736\LA\Plan\5736.CPW

I hereby certify that this plan, specification, or report was prepared by me or under my direct supervision and that I am a duly Licensed Professional Engineer under the laws of the State of Minnesota.

Print Name MARK C. HANSEN

Date _____ License # 43920

| | |
|---|---|
| STATE AID PROJECT NO. X X X | DRAWN BY M.MEDVED |
| STATE PROJECT NO. X | DESIGNED BY M.HANSEN |
| COUNTY PROJECT NO. X | CHECKED BY F.MOORE |
| CITY PROJECT NO. X | COMM. NO. 0065736 |

SRF CONSULTING GROUP, INC.

THREE RIVERS PARK DISTRICT

CONSTRUCTION PLAN AND PROFILE
DAKOTA RAIL REGIONAL TRAIL
STA. 818+00 TO STA. 843+98.65

SHEET 84 OF 188

11:06:03 AM
9/11/2007
H:\Projects\5736\LA\Plan\5736.CPW

# EXHIBIT B: COOPERATIVE EASEMENT AGREEMENT, SEPTEMBER 2007

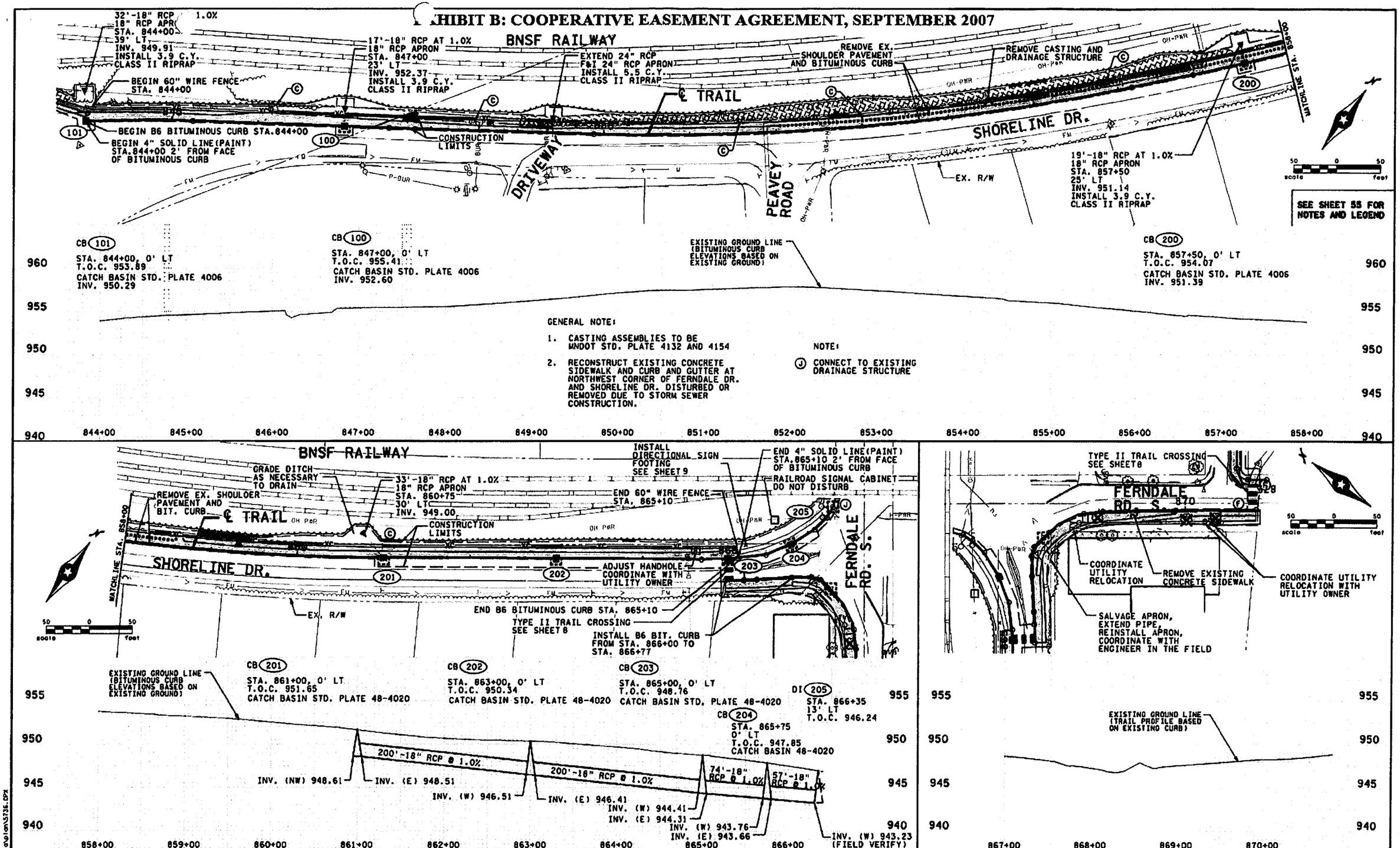


| NO | DATE | BY | CKD | APPR | REVISION |
|---|---|---|---|---|---|

...\projects\5736\ia\plan\5736.CPX

I hereby certify that this plan, specification, or report was prepared by me or under my direct supervision and that I am a duly Licensed Professional Engineer under the laws of the State of Minnesota.

Print Name: MARK C. HANSEN

Date _____ License # 43920

STATE AID PROJECT NO. X
STATE PROJECT NO. X
COUNTY PROJECT NO. X
CITY PROJECT NO. X

DRAWN BY W.M. VED
DESIGNED BY J.HANSEN
CHECKED BY F.MOORE
COMM. NO. 0065736

SRF CONSULTING GROUP, INC.

THREE RIVERS PARK DISTRICT

CONSTRUCTION PLAN AND PROFILE

DAKOTA RAIL REGIONAL TRAIL
STA. 844+00 TO STA. 866+40.46
STA. 867+00 TO STA. 870+81.97

SHEET 85 OF 188

11:06:16 AM
9/11/2007
m:\projects\5736\ia\plan\5736.CPX

# EXHIBIT B
## COOPERATIVE EASEMENT AGREEMENT, SEPTEMBER 2007

SEE SHEET 55 FOR NOTES AND LEGEND

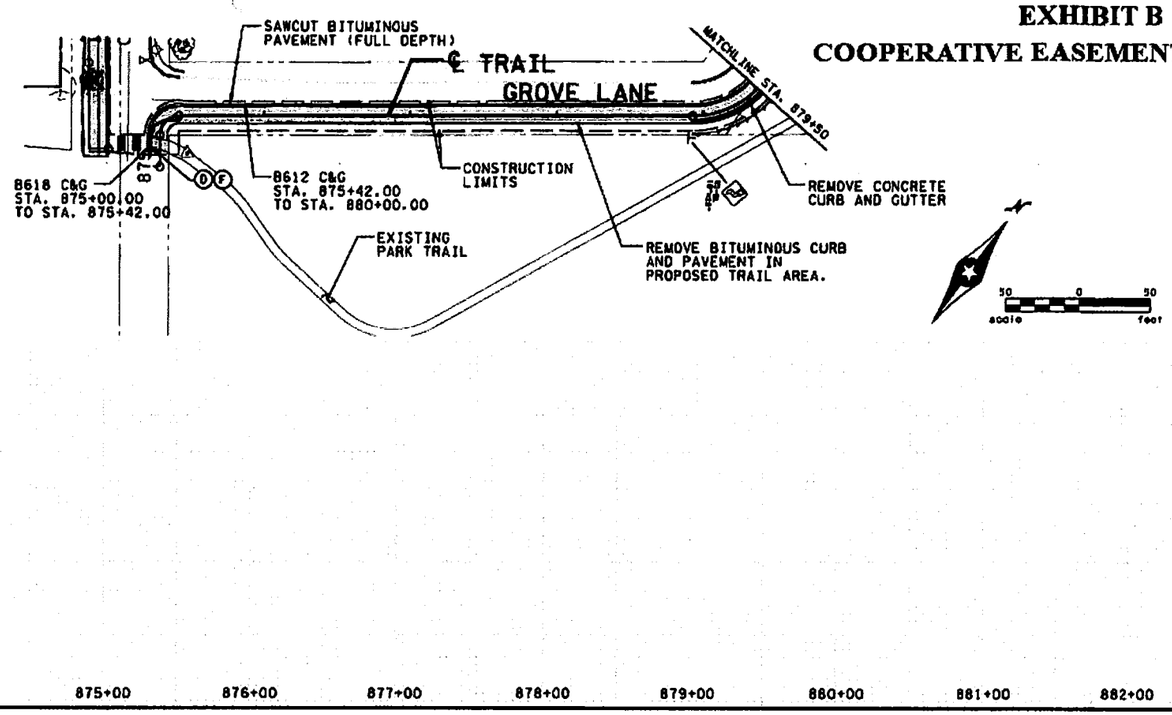


REFER TO SHEET 60 FOR DRAINAGE DESIGN INFORMATION.

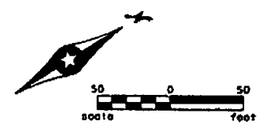


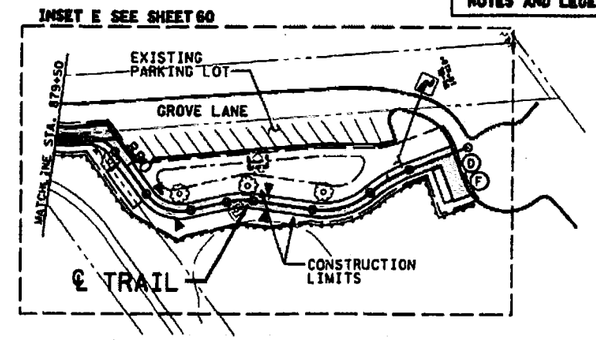


| NO | DATE | BY | C&D | APPR | REVISION |
|---|---|---|---|---|---|
| | | | | | |

...\projects\5736\ia\plan\5736.CPY

I hereby certify that this plan, specification, or report was prepared by me or under my direct supervision and that I am a duly licensed Professional Engineer under the laws of the State of Minnesota.

Print Name: MARK C. HANSEN

Date _____ License # 43920

| | |
|---|---|
| STATE AID PROJECT NO. X X | DRAWN BY M.MEDVED |
| STATE PROJECT NO. X | DESIGNED BY M.HANSEN |
| COUNTY PROJECT NO. X | CHECKED BY F.MOORE |
| CITY PROJECT NO. X | COMM. NO. 0065736 |

SRF CONSULTING GROUP, INC.

THREE RIVERS PARK DISTRICT

CONSTRUCTION PLAN AND PROFILE
DAKOTA RAIL REGIONAL TRAIL
STA. 875+00 TO STA. 882+58.76



11:06:29 AM
9/11/2007
n:\projects\5736\ia\plan\5736.CPY

# EXHIBIT C
# COOPERATIVE EASEMENT AGREEMENT, SEPTEMBER 2007

NOTES

1. 4" TOPSOIL AND SOD (TYPE SALT RESISTANT) SHALL BE USED WHERE TRAIL CONSTRUCTION OCCURS IN ESTABLISHED LAWN AREAS.
2. PROFILE GRADE SHOWN ON PLANS IS FOR GENERAL GUIDANCE ONLY. FIELD REVISIONS TO THE PROFILE MUST BE APPROVED BY ENGINEER.
3. TIE SLOPES VARY THROUGHOUT, REFER TO THE CROSS SECTIONS FOR LOCATIONS OF 1:2 SLOPES.
4. SEE CONSTRUCTION PLANS FOR CROSS SLOPE TRANSITION LOCATIONS.
5. SEE CONSTRUCTION/SOILS NOTE NUMBER 12 FOR TACK COAT APPLICATION RATE.
6. SIGNS TO BE INSTALLED 3' FROM EDGE OF SIGN TO EDGE OF TRAIL (SEE MMUTCD). CONTRACTOR TO PROVIDE A 3' CLEAR AREA FROM EDGE OF TRAIL. ALL OBSTRUCTIONS (INCLUDING VEGETATION AND PLANTINGS) SHOULD BE CLEARED AWAY UNLESS UNIQUE PHYSICAL CONSTRAINTS EXIST.
7. ALIGNMENT SHOWN ON CONSTRUCTION PLANS, CROSS SECTIONS, AND ALIGNMENT TAB IS ONE (1) FOOT FROM FACE OF PROPOSED BITUMINOUS CURB AND ONE (1) FOOT FROM FACE OF EXISTING CONCRETE CURB. THIS APPLIES ONLY TO THE TRAILS ALONG SHORELINE DRIVE AND FERNDALE ROAD IN WAYZATA.
8. REFER TO THE TRAIL CROSS SECTIONS FOR LOCATIONS OF EXTENDED TRAIL SHOULDERS.
9. IN LOCATIONS OF PROPOSED CONCRETE CURB AND GUTTER, BITUMINOUS SAWCUT TO BE 2' FROM EDGE OF PROPOSED GUTTER. INSTALL 2' WIDTH OF NEW PAVEMENT IN FRONT OF PROPOSED GUTTER.

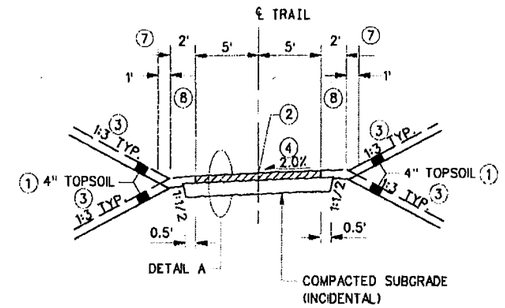


TYPICAL SECTION
INDEPENDENT TRAIL

STA. 161+75.00 TO STA. 462+10.00*
STA. 464+26.00 TO STA. 613+73.00
STA. 614+10.00 TO STA. 653+66.00
STA. 659+08.00 TO STA. 745+28.00
STA. 746+10.00 TO STA. 843+99.00
STA. 880+00.00 TO STA. 882+49.00

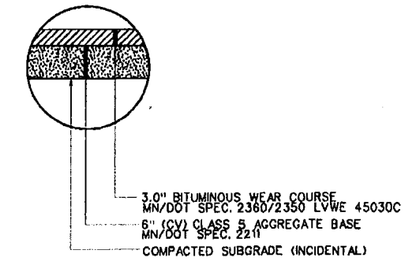


DETAIL A
TYPICAL TRAIL SECTION

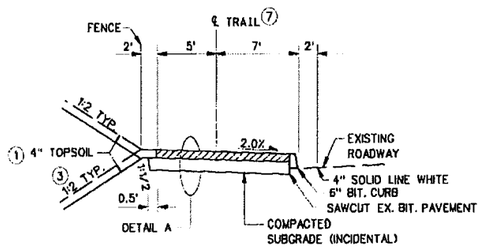


TYPICAL SECTION
TRAIL AT BACK OF BITUMINOUS CURB
(ALONG SHORELINE DR.)

STA. 844+00 TO STA. 865+11
STA. 867+00 TO STA. 867+77

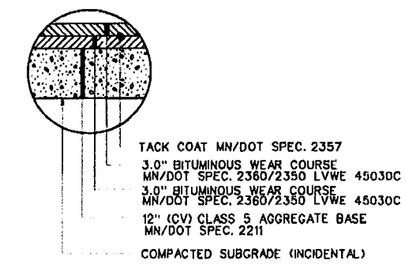


DETAIL B

TYPICAL STREET SECTION AND
* TRAIL FROM STA. 345+40 TO STA. 401+34 TO BE CONSTRUCTED PER DETAIL B.

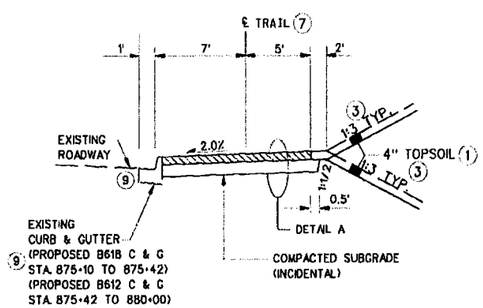


TYPICAL SECTION
TRAIL AT BACK OF CONCRETE CURB
(ALONG FERNDALE ROAD AND WAYZATA TRAIL HEAD)

STA. 867+77 TO STA. 870+82
STA. 875+10 TO STA. 880+00

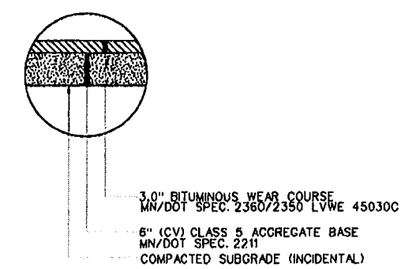


DETAIL C
TYPICAL DRIVEWAY SECTION

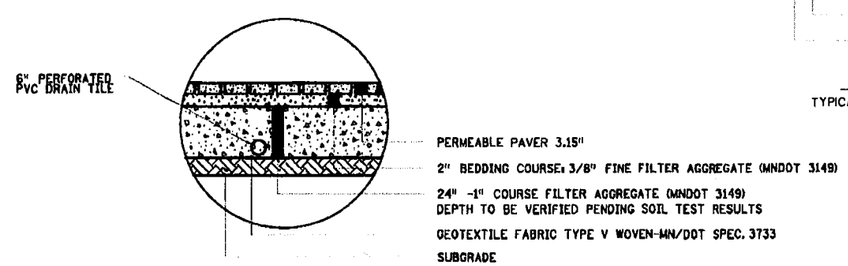


NOTE:
EXCAVATION TO BE PAID AS ITEM 2105.507, SUBGRADE EXCAVATION FOR EXCAVATION BELOW PAVERS, DEPTH TO BE DETERMINED FROM SOILS TEST.

DETAIL D
PERMEABLE PAVER TYPICAL SECTION
LAFAYETTE CLUB TENNIS PARKING LOT

| NO | DATE | BY | CKO | APPR | REVISION |
|---|---|---|---|---|---|
| 1 | 7-23-07 | MCI | FGM | MCH | ADD DETAIL D AND REVISE NOTE FOR DETAIL B |

...\Projects\5736\LA\Plan\5736.TSA

I hereby certify that this plan, specification, or report was prepared by me or under my direct supervision and that I am a duly Licensed Professional Engineer under the laws of the State of Minnesota.

Print Name MARK C. HANSEN

Date _____ License # 43920

STATE AID PROJECT NO. X X
STATE PROJECT NO. X
COUNTY PROJECT NO. X
CITY PROJECT NO. X

DRAWN BY M.MEDVED
DESIGNED BY M.HANSEN
CHECKED BY F.MOORE
COMM NO. 0065736

SRF CONSULTING GROUP, INC.

THREE RIVERS PARK DISTRICT
TYPICAL SECTIONS
DAKOTA RAIL REGIONAL TRAIL



4:25:42 PM
9/12/2007
N:\Projects\5736\LA\Plan\5736.TSA