CITY OF TONKA BAY
ITEM NO. 9F

Memo

To: Honorable Mayor and City Council

CC: Joe Kohlmann – City Administrator

From: Robin Bowman – Public Works Superintendent

Date: March 24th, 2015

Re: Dehumidifier Air Dryer

The new Dehumidifier Air Dryer that's needed in the water plant is for controlling humidity. Staff has received quotes from four venders. two of the venders believe that we should only need one 195 Hi-E Dry but will not guarantee it because we have so many variables in the water plant, We will buy one and if it can't keep the humidity down we will get the second one. Bry-Air would be an exact replacement of what we have in use now.

Vender	Cost
Alden Pool Municipal Supply Co. $3,428.00/W a case of filters Less the filter $144.00	*$3,284.00*
Bry-Air add $2,699 for PLC touch screen HMI unit control	*$36,589.00*
Dakota Supply Group Inc.	*$2,984.00*
USA Blue Book on-line $3,349.95 add $50.00 min for S&H	*$3,399.95*

Attached is a quote from Alden Pool Municipal Supply Co.
Attached is a quote from Bry-Air
Attached is a quote from Dakota Supply Group Inc
Attached is a quote from USA Blue Book on-line
Attached Note from Mike Jinda Dakota Supply Group Inc
Attached photo of the Dehumidifier Air Dryer we are replacing
Attached dimensions of the HI-EDry

Source of Funds.

The City has in the 2015 Water CIP new Air Dryer for $21,500.00. Staff is recommending the City purchase one of two of the Hi-E Dry's for the amount of **$2,984.00** and a second one for the same price if needed from Dakota Supply Group Inc; this would be a savings of **$15,532.00** in the CIP fund for the Dehumidifier Air Dryer.

Council Action Requested:

Motion to approve the attached quote from Dakota Supply Group Inc in the amount of **$2,984.00 and a second one for the same price, if needed.**

HI-E-DRY STORE.COM
65919-267th St.
Alden MN 56009
877-242-7156

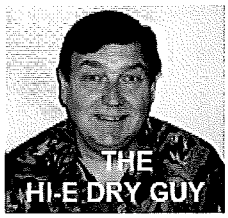

Estamate

Date	Estimate #
1/23/2015	E15013

Name / Address
Tonka Bay Attn Robin **4901 Manitou Rd** **Excelsior, MN 55331**

Terms	Project

Description	Qty	Total
HI-E Dry Dehumidifier Mod. 195 **35,000 cubic ft** **Aprox 65 x 65 x 8 FT #29-13** **HI-E DRY 195 4030060 no freight plus a case of filters ($144 value)**		**3,428.00**
	Sales Tax (6.875%)	$0.00
	Total	$3,428.00

Bry-Air
EST. 1964

Total Environmental Conditioning Solutions™

Date:	February 3, 2015	**From:**	Brad Hess
Company:	City of Tonka Bay	**Company:**	Bry-Air, Inc.
Attention:	Robin Bowman	**Proposal #:**	50BH-1502-049
Address:	4901 Manitou Road Tonka Bay, MN 55331	**Project Name:**	Tonka Bay WTP
Phone:	952-474-2947	**Location:**	Tonka Bay, MN
E-Mail:	rbowman@cityoftonkabay.net	**Application:**	

Dear Robin:

We are pleased to present pricing for your review and consideration on the following item based on information from you and certain assumptions. Bry-Air packaged dehumidification system complete with control panel, BRYSORB PLUS DESICCANT MEDIA, desiccant rotor assembly, rotor drive assembly, outlet dampers, mounted on a structural skid, pre-wired with disconnect switch, tested prior to shipment and features listed below.

Equipment List

VFB-18-G-1500

- Process fan & motor
- Reactivation heater
- 45% process and reactivation inlet filters
- 1 hard copy and 2 CD (PDF format) of the O&M manual
- Estimated Physical Size 9.5' L x 4.5' W x 7' H*
- Reactivation fan & motor
- Relay based control
- Control enclosure with non-fused disconnect switch
- Certified Factory startup (15 day notice required)
- Estimated Shipping Weight is 1400 lbs.*

**Physical dimensions, and weight above are estimates only to be verified at time of submittal.*

Total NET Selling Price is: $36,589.00 USD

Optional Add / Deduct:

- Add for PLC with touch screen HMI unit control: **$2,699.00 USD**

Note: The price above includes our Certified Factory Start-up (*see start-up scope below*). Bry-Air feels that it is in the best interest of our customers to have a factory trained and certified technician commission our new equipment. We understand, however, you may elect to decline this service. If you elect to decline the factory start-up and there is a diagnosed problem with the unit that is unrelated to a defect in the parts or construction and a technician's onsite assistance is required, you will be charged our normal service fee of $1375.00 per day plus living and travel expenses. If the BrySmart PLC control system is purchased and is to be integrated into a building automation system or refrigeration control system, start-up is mandatory.

PAYMENT TERMS	*30% Due with Drawing Submittals; 40% Due before Shipment; 30% Due 30 days after shipment or prior to start-up, whichever comes first. Also see attached Bry-Air Payment Options sheet for additional payment terms.*
FREIGHT TERMS:	*FOB Origin, Freight Prepaid & Add*
DELIVERY:	*9-10 weeks standard after drawings (or after approval, if required); allow 2-3 weeks for drawing completion. If faster delivery is required please contact Bry-Air, Inc to discuss options.*

Bry-Air, Inc.
10793 State Route 37W
Sunbury, OH 43074
P: 740.965.2974 or 877.427.9247
F: 740.965.5470
Visit us on the web at www.bry-air.com

Bry-Air is a registered trademark of Bry-Air (Asia) Pvt. Ltd. – All Rights Reserved

DAKOTA SUPPLY GROUP INC
475 WEST MINNEHAHA AVE
ST. PAUL, MN 55103

PH #: 651-224-5781
SUBMITTED BY: DAWNWILLIAMS

DATE: 1/29/2015 PAGE 2

QUOTATION TO:

004322
CASH SALE SHELTER ST P-2A NET
CITY OF TONKA BAY
4901 MANITOU ROAD
ATTN: ROBIN BOWMAN
CITY OF TONKA BAY, MN
55331

PROJECT: CITY OF TONKA BAY
QUOTE NO: 5483009
ORDERED BY:

QTY	PROD #/DESCRIPTION	UNIT PRICE	UOM	EXT PRICE
1 EA	TSP4030060 HI-E DRY 195 DEHUMID 192 PINT	2,984.00000	EA	2,984.00

BID TOTAL **2,984.00**

**** END OF BID ****

Shopping Cart

Product	Quantity	SubTotal
HI-E DRY Dehumidifier (Model 195) 30-35K cu. ft. Item: 68833	1 Delete	$3,349.95

Update Cart

Sub Total: $3,349.95
Shipping: Calculated During Checkout
Estimated Tax: Calculated During Checkout

Order Notes

Enter any special instructions or notes about this order:

Submit Notes

Hi Robin,
One of your men was able to walk me through the building this afternoon around 2. We took several measurements and looked at temperature, water temperature, water surface area, and overall area. I then called the manufacturer and talked with their staff that helps verify the sizing on these type of installations. Their recommendation was to put in a Hi E Dry 195 on the upper level, as well as a second one on the lower level.

Having said that, given the typical cool water temperatures, and air temperatures that hover around 60 degrees or so, they also feel that one Hi E Dry on the upper level (because that is where all of the exposed water is) has a reasonable chance of doing an adequate job. The biggest variable would be building tightness and outside air infiltration.

If this is something that you only have one opportunity to do and it must take care of the situation for sure, I would go with the 2 - Hi E Dry 195's. The other advantage this would give you is in case one unit went down, you could still control most of the moisture, until you get the other one up and running.

Otherwise, I would try one unit on the upper level and see how that goes, knowing that a second one can be added down the road if needed.

Please let Dawn or I know what you decide to do.

Thank you Robin for this opportunity,

Mike Jindra
Dakota Supply Group
St. Paul, MN
(612) 597-3344

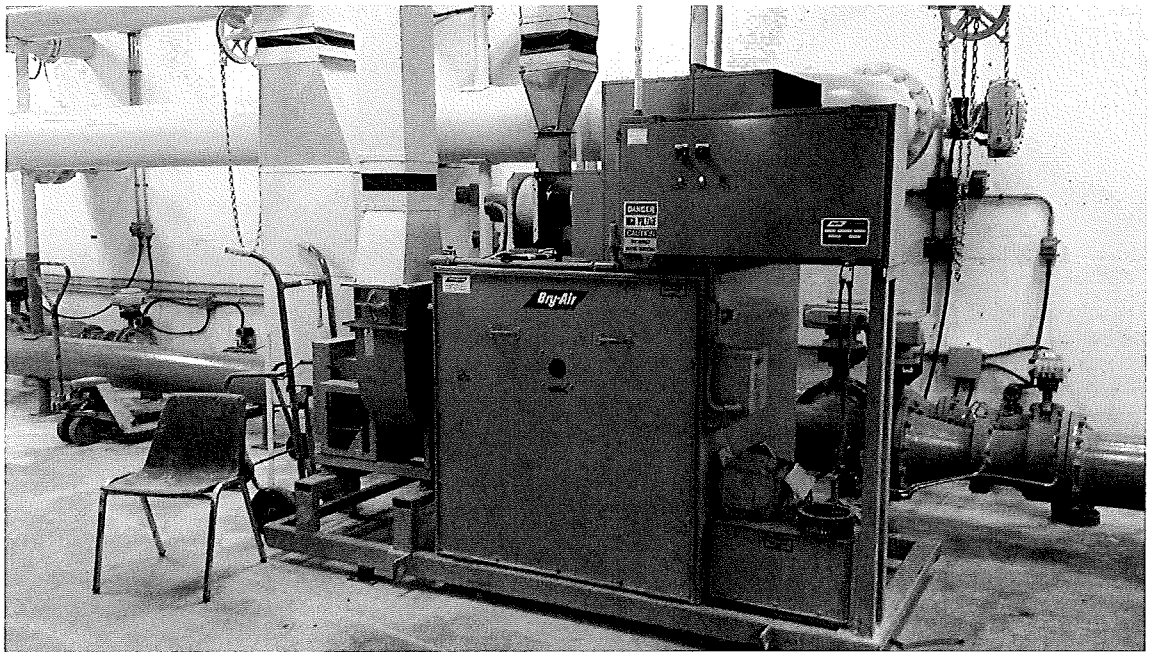

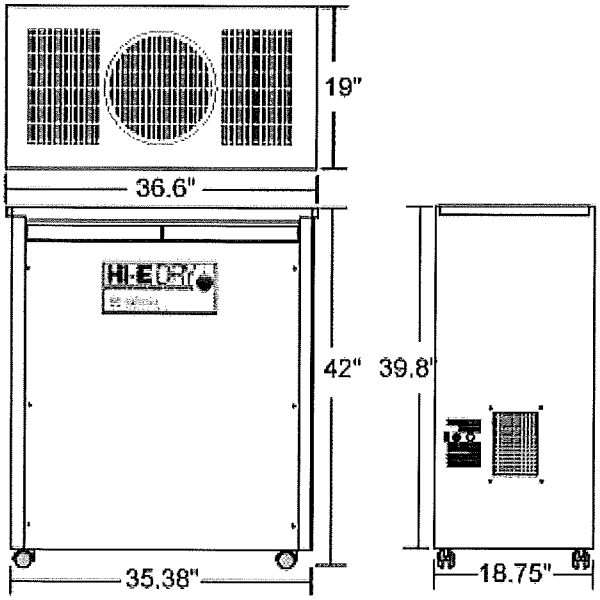
19"
36.6"
42"
39.8"
35.38"
18.75"